MOD25-M8 Motor Mechanism

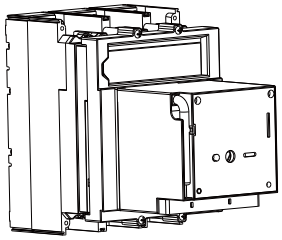

In order to protect the environment, when the product or its components are scrapped,please dispose of it as industrial waste;or hand it over to the recycling station for disaggregation,recycling and reuse according to relevant national regulations

CHNT

A Installation

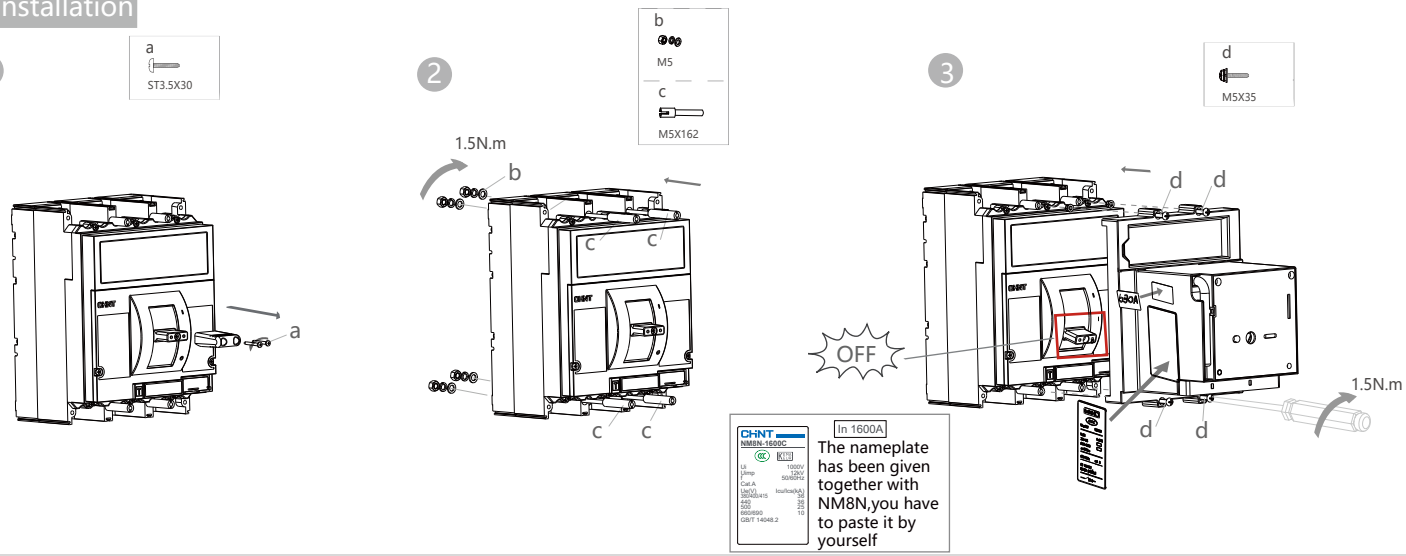

Installation Dimension (mm)

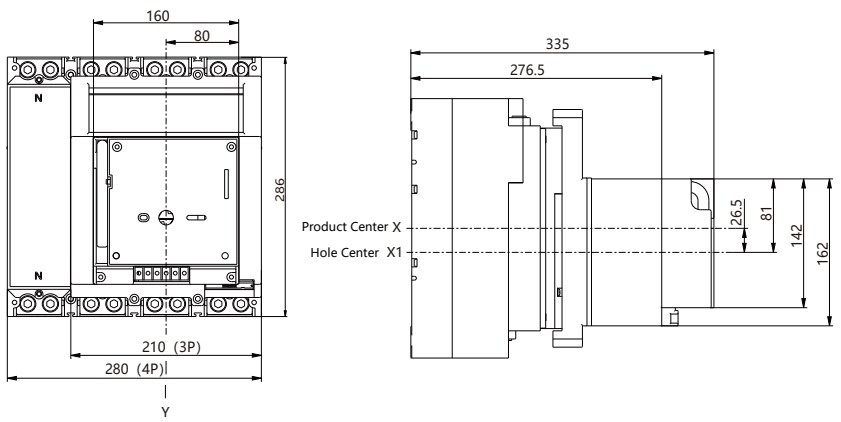

B Operation Mode

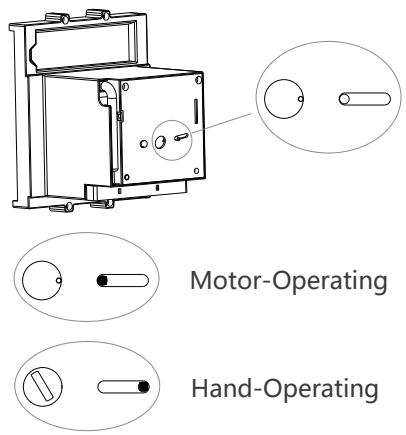

C Motor-Operating

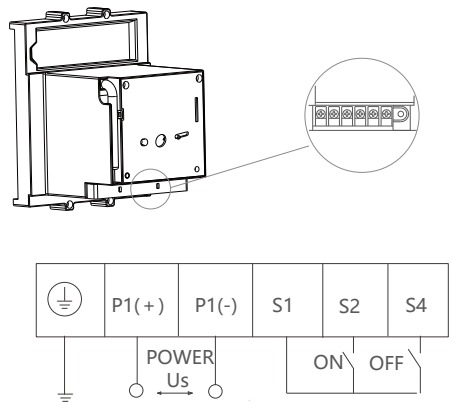

D Hand-Operating

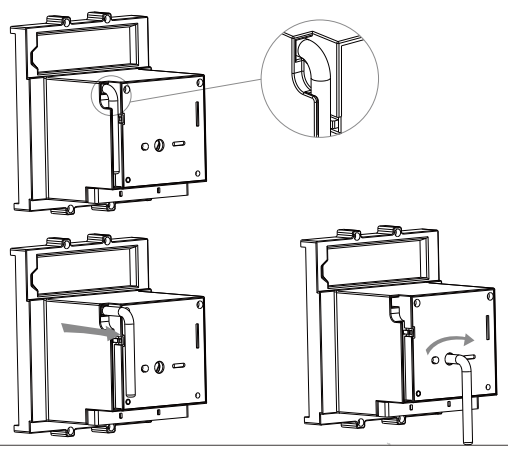

E Operating Instruction

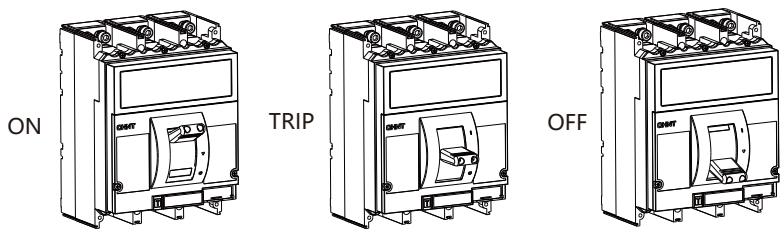

ON OFF

ON-Position:Red TRIP-Position:White OFF-Position:Green

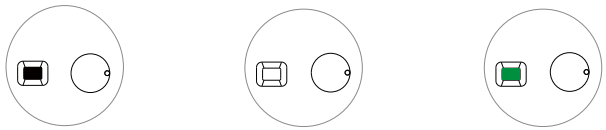

Zhejiang CHINT Electrics Co., Ltd.

Add: No.1, CHINT Road, CHINT Industrial Zone, North Baixiang, Yueqing, Zhejiang Province.

Tel: 86-577-62777777 4001177797

Fax: global-sales@chint.com

Web: http://en.chint.com